Compact Design
Small Capacity Fine Fog Nozzles

CBIM

Features

■Compact version of BIM series producing fine atomization. Space-saving design.

■Clog-resistant. Easy maintenance due to low number of parts.

■Available in liquid pressure or liquid siphon feed type*1, three spray pattern types (flat spray, hollow cone spray, full cone spray)—23 varieties in total. Wide selection.

*1) CBIMJ (full cone spray) series has no liquid siphon type.

Structure & Material

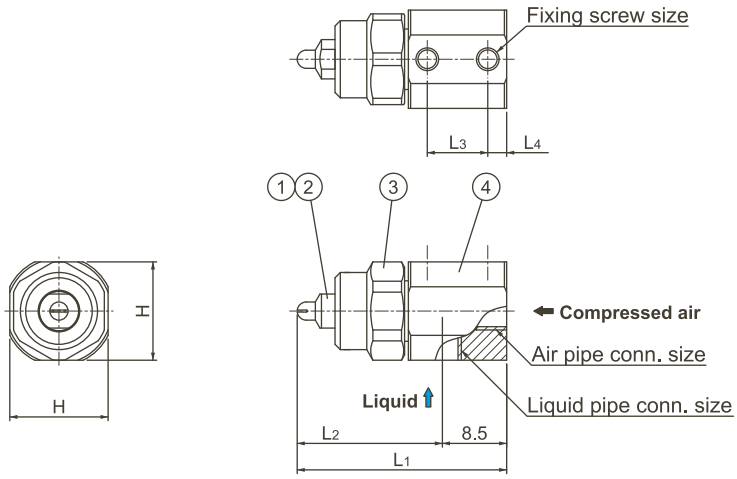

■Components and materials

No.	Components	Standard materials
①	Spray tip	S303
②	Core	S303
③	Cap	S303
④	Adaptor	S303

Dimensions & Pipe Connection Sizes

Air consumption code	Dimensions (mm)					Pipe connection size			Mass (g)
	L_1	L_2	L_3	L_4	H	Compressed air	Liquid	Fixing	
005	27.7	19.2	8	2.5	13	M5 depth 3	M5 depth 3	M3x2	22
01	27.7	19.2							
02	28.0	19.5							
04	31.3	22.8							
075	32.6	24.1							

CBIMK (Hollow Cone Spray)

Features

- Hollow cone spray pneumatic nozzle producing fine atomization with a mean droplet diameter of 100 µm or less.*1
- Features large turn-down ratio under liquid pressures of 0.1–0.3 MPa.
- Spray angle of 60°.

*1) Droplet diameter measured by laser Doppler method

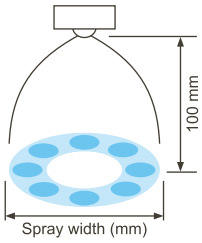

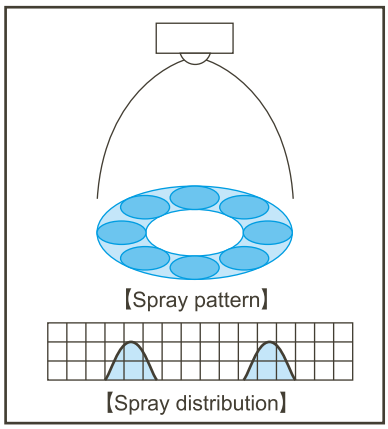

Spray angle code *2	Air consumption code	Air pressure (MPa)	Spray capacity (ℓ/hr) & Air consumption (ℓ/min, Normal) Liquid pressure (MPa) 0.1 Liquid	0.1 Air	0.15 Liquid	0.15 Air	0.2 Liquid	0.2 Air	0.25 Liquid	0.25 Air	0.3 Liquid	0.3 Air	Spray width*3 (mm) Liquid press. (MPa) 0.1	0.15	0.25	Mean droplet dia. (µm) Laser Doppler method	Free passage diameter (mm) Spray orifice	Adaptor Liquid	Adaptor Air
60	04	0.2	4.5	25	9.5	20	17.0	13	—	—	—	—	140	160	—	20–100	0.5	0.9	0.9
		0.3	2.0	36	4.7	35	8.5	31	13.1	27	19.6	20	130	160	170				
		0.4	—	—	2.8	45	4.8	44	7.7	41	11.4	37	—	150	170				
	075	0.2	8.7	51	18.4	42	33.3	29	—	—	—	—	140	170	—	20–100	0.7	1.2	1.4
		0.3	4.0	74	8.8	71	15.5	64	24.3	54	38.5	40	130	160	180				
		0.4	—	—	5.6	91	9.1	89	14.8	82	21.8	74	—	150	170				

*2) Spray angle measured at compressed air pressure of 0.3 MPa and liquid pressure of 0.1 MPa. *3) Measured at 100 mm from nozzle.

CBIMJ (Full Cone Spray)

Features

- Full cone spray pneumatic nozzle producing fine atomization with a mean droplet diameter of 100 µm or less.*1
- Features large turn-down ratio under liquid pressures of 0.1–0.3 MPa.
- Spray angle of 20°.

*1) Droplet diameter measured by laser Doppler method

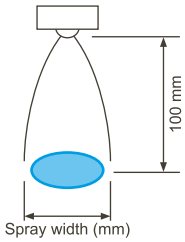

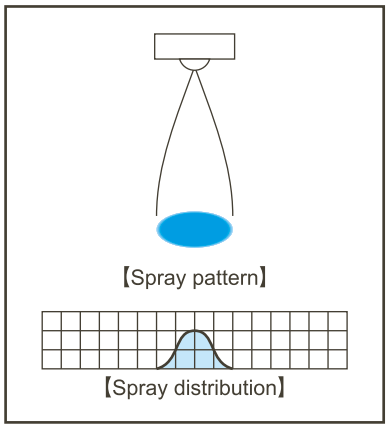

Spray angle code *2	Air consumption code	Air pressure (MPa)	Spray capacity (ℓ/hr) & Air consumption (ℓ/min, Normal) Liquid pressure (MPa) 0.1 Liquid	0.1 Air	0.15 Liquid	0.15 Air	0.2 Liquid	0.2 Air	0.25 Liquid	0.25 Air	0.3 Liquid	0.3 Air	Spray width*3 (mm) Liquid press. (MPa) 0.1	0.15	0.25	Mean droplet dia. (µm) Laser Doppler method	Free passage diameter (mm) Spray orifice	Adaptor Liquid	Adaptor Air
20	005	0.2	0.7	3.4	1.5	2.6	—	—	—	—	—	—	25	20	—	20–100	0.7	0.4	0.3
		0.3	0.25	5.0	0.6	4.7	1.25	4.1	2.0	3.2	—	—	30	30	25				
		0.4	—	—	0.3	6.3	0.55	6.0	1.1	5.5	1.65	4.8	—	30	30				
	01	0.2	1.3	6.8	2.8	5.3	—	—	—	—	—	—	25	30	—	20–100	0.8	0.6	0.5
		0.3	0.5	10	1.1	9.5	2.3	8.4	4.0	6.5	—	—	30	30	25				
		0.4	—	—	0.6	12.4	1.1	12	2.2	11	3.3	9.6	—	30	30				
	02	0.2	2.2	14	5.3	11	—	—	—	—	—	—	25	20	—	20–100	1.1	0.9	0.7
		0.3	1.0	20	2.5	19	4.6	17	8.3	12	14.3	7	30	30	25				
		0.4	—	—	1.4	25	2.3	24	4.0	23	6.3	20	—	30	30				
	04	0.2	4.5	25	9.5	20	17.0	13	—	—	—	—	30	25	—	20–100	1.6	0.9	0.9
		0.3	2.0	36	4.7	35	8.5	31	13.1	27	19.6	20	35	35	30				
		0.4	—	—	2.8	45	4.8	44	7.7	41	11.4	37	—	35	35				
	075	0.2	8.7	51	18.4	42	33.3	29	—	—	—	—	30	25	—	20–100	2.0	1.2	1.4
		0.3	4.0	74	8.8	71	15.5	64	24.3	54	38.5	40	35	35	30				
		0.4	—	—	5.6	91	9.1	89	14.8	82	21.8	74	—	35	35				

*2) Spray angle measured at compressed air pressure of 0.3 MPa and liquid pressure of 0.1 MPa. *3) Measured at 100 mm from nozzle.

List of Spray Tip Interchangeability

Spray tips with ◎ are interchangeable with each other to change spray angle and spray pattern. See page 41 for SCBIM series.

			Liquid pressure type																												Liquid siphon type				
			BIMV															BIMK				BIMJ									BIMV-S			BIMK-S	
			11002	11004	11075	11015	11022	8002	8004	80075	8015	8022	4502	4504	45075	4515	4522	6004	60075	6015	6022	7004	70075	7015	7022	2002	2004	20075	2015	2022	8002S	8004S	80075S	6004S	60075S
Liquid pressure type	BIMV	11002		×	×	×	×	◎	×	×	×	×	◎	×	×	×	×	×	×	×	×	×	×	×	×	◎	×	×	×	×	×	×	×	×	×	×
		11004	×		×	×	×	×	◎	×	×	×	×	◎	×	×	×	◎	×	×	×	◎	×	×	×	×	◎	×	×	×	×	×	×	×	×
		11075	×	×		×	×	×	×	◎	×	×	×	×	◎	×	×	×	◎	×	×	×	◎	×	×	×	×	◎	×	×	×	×	×	×	×
		11015	×	×	×		×	×	×	×	◎	×	×	×	×	◎	×	×	×	◎	×	×	×	◎	×	×	×	×	◎	×	×	×	×	×	×
		11022	×	×	×	×		×	×	×	×	◎	×	×	×	×	◎	×	×	×	◎	×	×	×	◎	×	×	×	×	◎	×	×	×	×	×
		8002	◎	×	×	×	×		×	×	×	×	◎	×	×	×	×	×	×	×	×	×	×	×	×	◎	×	×	×	×	×	×	×	×	×
		8004	×	◎	×	×	×	×		×	×	×	×	◎	×	×	×	◎	×	×	×	◎	×	×	×	×	◎	×	×	×	×	×	×	×	×
		80075	×	×	◎	×	×	×	×		×	×	×	×	◎	×	×	×	◎	×	×	×	◎	×	×	×	×	◎	×	×	×	×	×	×	×
		8015	×	×	×	◎	×	×	×	×		×	×	×	×	◎	×	×	×	◎	×	×	×	◎	×	×	×	×	◎	×	×	×	×	×	×
		8022	×	×	×	×	◎	×	×	×	×		×	×	×	×	◎	×	×	×	◎	×	×	×	◎	×	×	×	×	◎	×	×	×	×	×
		4502	◎	×	×	×	×	◎	×	×	×	×		×	×	×	×	×	×	×	×	×	×	×	×	◎	×	×	×	×	×	×	×	×	×
		4504	×	◎	×	×	×	×	◎	×	×	×	×		×	×	×	◎	×	×	×	◎	×	×	×	×	◎	×	×	×	×	×	×	×	×
		45075	×	×	◎	×	×	×	×	◎	×	×	×	×		×	×	×	◎	×	×	×	◎	×	×	×	×	◎	×	×	×	×	×	×	×
		4515	×	×	×	◎	×	×	×	×	◎	×	×	×	×		×	×	×	◎	×	×	×	◎	×	×	×	×	◎	×	×	×	×	×	×
		4522	×	×	×	×	◎	×	×	×	×	◎	×	×	×	×		×	×	×	◎	×	×	×	◎	×	×	×	×	◎	×	×	×	×	×
	BIMK	6004	×	◎	×	×	×	×	◎	×	×	×	×	◎	×	×	×		×	×	×	◎	×	×	×	×	◎	×	×	×	×	×	×	×	×
		60075	×	×	◎	×	×	×	×	◎	×	×	×	×	◎	×	×	×		×	×	×	◎	×	×	×	×	◎	×	×	×	×	×	×	×
		6015	×	×	×	◎	×	×	×	×	◎	×	×	×	×	◎	×	×	×		×	×	×	◎	×	×	×	×	◎	×	×	×	×	×	×
		6022	×	×	×	×	◎	×	×	×	×	◎	×	×	×	×	◎	×	×	×		×	×	×	◎	×	×	×	×	◎	×	×	×	×	×
	BIMJ	7004	×	◎	×	×	×	×	◎	×	×	×	×	◎	×	×	×	◎	×	×	×		×	×	×	×	◎	×	×	×	×	×	×	×	×
		70075	×	×	◎	×	×	×	×	◎	×	×	×	×	◎	×	×	×	◎	×	×	×		×	×	×	×	◎	×	×	×	×	×	×	×
		7015	×	×	×	◎	×	×	×	×	◎	×	×	×	×	◎	×	×	×	◎	×	×	×		×	×	×	×	◎	×	×	×	×	×	×
		7022	×	×	×	×	◎	×	×	×	×	◎	×	×	×	×	◎	×	×	×	◎	×	×	×		×	×	×	×	◎	×	×	×	×	×
		2002	◎	×	×	×	×	◎	×	×	×	×	◎	×	×	×	×	×	×	×	×	×	×	×	×		×	×	×	×	×	×	×	×	×
		2004	×	◎	×	×	×	×	◎	×	×	×	×	◎	×	×	×	◎	×	×	×	◎	×	×	×	×		×	×	×	×	×	×	×	×
		20075	×	×	◎	×	×	×	×	◎	×	×	×	×	◎	×	×	×	◎	×	×	×	◎	×	×	×	×		×	×	×	×	×	×	×
		2015	×	×	×	◎	×	×	×	×	◎	×	×	×	×	◎	×	×	×	◎	×	×	×	◎	×	×	×	×		×	×	×	×	×	×
		2022	×	×	×	×	◎	×	×	×	×	◎	×	×	×	×	◎	×	×	×	◎	×	×	×	◎	×	×	×	×		×	×	×	×	×
Liquid siphon type	BIMV-S	8002S	×	×	×	×	×	×	×	×	×	×	×	×	×	×	×	×	×	×	×	×	×	×	×	×	×	×	×	×		×	×	×	×
		8004S	×	×	×	×	×	×	×	×	×	×	×	×	×	×	×	×	×	×	×	×	×	×	×	×	×	×	×	×	×		×	◎	×
		80075S	×	×	×	×	×	×	×	×	×	×	×	×	×	×	×	×	×	×	×	×	×	×	×	×	×	×	×	×	×	×		×	◎
	BIMK-S	6004S	×	×	×	×	×	×	×	×	×	×	×	×	×	×	×	×	×	×	×	×	×	×	×	×	×	×	×	×	×	◎	×		×
		60075S	×	×	×	×	×	×	×	×	×	×	×	×	×	×	×	×	×	×	×	×	×	×	×	×	×	×	×	×	×	×	◎	×	

			Liquid pressure type																							Liquid siphon type						
			CBIMV															CBIMK		CBIMJ						CBIMV-S					CBIMK-S	
			11001	11002	11004	110075	80005	8001	8002	8004	80075	45005	4501	4502	4504	45075	6004	60075	20005	2001	2002	2004	20075	80005S	8001S	8002S	8004S	80075S	6004S	60075S
Liquid pressure type	CBIMV	11001		×	×	×	×	◎	×	×	×	×	◎	×	×	×	×	×	×	◎	×	×	×	×	×	×	×	×	×	×	×
		11002	×		×	×	×	×	◎	×	×	×	×	◎	×	×	×	×	×	◎	×	×	×	×	×	×	×	×	×	×
		11004	×	×		×	×	×	×	◎	×	×	×	×	◎	×	◎	×	×	×	◎	×	×	×	×	×	×	×	×	×
		110075	×	×	×		×	×	×	×	◎	×	×	×	×	◎	×	◎	×	×	×	×	◎	×	×	×	×	×	×	×
		80005	×	×	×	×		×	×	×	×	◎	×	×	×	×	×	×	◎	×	×	×	×	×	×	×	×	×	×	×
		8001	◎	×	×	×	×		×	×	×	×	◎	×	×	×	×	×	×	◎	×	×	×	×	×	×	×	×	×	×
		8002	×	◎	×	×	×	×		×	×	×	×	◎	×	×	×	×	×	×	◎	×	×	×	×	×	×	×	×	×
		8004	×	×	◎	×	×	×	×		×	×	×	×	◎	×	◎	×	×	×	×	◎	×	×	×	×	×	×	×	×
		80075	×	×	×	◎	×	×	×	×		×	×	×	×	◎	×	◎	×	×	×	×	◎	×	×	×	×	×	×	×
		45005	×	×	×	×	◎	×	×	×	×		×	×	×	×	×	×	◎	×	×	×	×	×	×	×	×	×	×	×
		4501	◎	×	×	×	×	◎	×	×	×	×		×	×	×	×	×	×	◎	×	×	×	×	×	×	×	×	×	×
		4502	×	◎	×	×	×	×	◎	×	×	×	×		×	×	×	×	×	×	◎	×	×	×	×	×	×	×	×	×
		4504	×	×	◎	×	×	×	×	◎	×	×	×	×		×	◎	×	×	×	×	◎	×	×	×	×	×	×	×	×
		45075	×	×	×	◎	×	×	×	×	◎	×	×	×	×		×	◎	×	×	×	×	◎	×	×	×	×	×	×	×
	CBIMK	6004	×	×	◎	×	×	×	×	◎	×	×	×	×	◎	×		×	×	×	×	◎	×	×	×	×	×	×	×	×
		60075	×	×	×	◎	×	×	×	×	◎	×	×	×	×	◎	×		×	×	×	×	◎	×	×	×	×	×	×	×
	CBIMJ	20005	×	×	×	×	◎	×	×	×	×	◎	×	×	×	×	×	×		×	×	×	×	×	×	×	×	×	×	×
		2001	◎	×	×	×	×	◎	×	×	×	×	◎	×	×	×	×	×	×		×	×	×	×	×	×	×	×	×	×
		2002	×	◎	×	×	×	×	◎	×	×	×	×	◎	×	×	×	×	×	×		×	×	×	×	×	×	×	×	×
		2004	×	×	◎	×	×	×	×	◎	×	×	×	×	◎	×	◎	×	×	×	×		×	×	×	×	×	×	×	×
		20075	×	×	×	◎	×	×	×	×	◎	×	×	×	×	◎	×	◎	×	×	×	×		×	×	×	×	×	×	×
Liquid siphon type	CBIMV-S	80005S	×	×	×	×	×	×	×	×	×	×	×	×	×	×	×	×	×	×	×	×	×		×	×	×	×	×	×
		8001S	×	×	×	×	×	×	×	×	×	×	×	×	×	×	×	×	×	×	×	×	×	×		×	×	×	×	×
		8002S	×	×	×	×	×	×	×	×	×	×	×	×	×	×	×	×	×	×	×	×	×	×	×		×	×	×	×
		8004S	×	×	×	×	×	×	×	×	×	×	×	×	×	×	×	×	×	×	×	×	×	×	×	×		×	◎	×
		80075S	×	×	×	×	×	×	×	×	×	×	×	×	×	×	×	×	×	×	×	×	×	×	×	×	×		×	◎
	CBIMK-S	6004S	×	×	×	×	×	×	×	×	×	×	×	×	×	×	×	×	×	×	×	×	×	×	×	×	×	◎	×	
		60075S	×	×	×	×	×	×	×	×	×	×	×	×	×	×	×	×	×	×	×	×	×	×	×	×	×	×	◎	

SCBIM series Spray Tip Interchangeability

			Liquid pressure type							Liquid siphon type	
			SCBIMV					SCBIMJ		SCBIMV-S	
			11001	80005	8001	45005	4501	20005	2001	80005S	8001S
Liquid pressure type	SCBIMV	11001		×	◎	×	◎	×	◎	×	×
		80005	×		×	◎	×	◎	×	×	×
		8001	◎	×		×	◎	×	◎	×	×
		45005	×	◎	×		×	◎	×	×	×
		4501	◎	×	◎	×		×	◎	×	×
	SCBIMJ	20005	×	◎	×	◎	×		×	×	×
		2001	◎	×	◎	×	◎	×		×	×
Liquid siphon type	SCBIMV-S	80005S	×	×	×	×	×	×	×		×
		8001S	×	×	×	×	×	×	×	×	

Spray tips with ◎ are interchangeable with each other.

CBIM series Cap Interchangeability

Adaptor type		T*1					CSP/CSN*2		
		005	01	02	04	075	005	01	02
T*1	005		◎	◎	×	×	×	×	×
	01	◎		◎	×	×	×	×	×
	02	◎	◎		×	×	×	×	×
	04	×	×	×		◎	×	×	×
	075	×	×	×	◎		×	×	×
CSP/CSN*2	005	×	×	×	×	×		◎	◎
	01	×	×	×	×	×	◎		◎
	02	×	×	×	×	×	◎	◎	

Caps with ◎ are interchangeable with each other.
*1) Air consumption codes available for T-type adaptor are 005, 01, 02, 04, and 075.
*2) Air consumption codes available for CSP- and CSN-type adaptors are 005, 01, and 02 only.

When changing an adaptor type of the existing CBIM nozzle between T, CSP, and CSN types, it is possible to continue to use the same spray tips and core, which are the common parts (the cap is not).

Common applications

■**Paper & Pulp:** Moisture control, spraying mold lubricant, preventing cardboard from curling
■**Plastics:** Spraying anti-electrostatic agent, coating
■**Iron & Steel:** Cooling metal sheets
■**Glass:** Coating and cooling glass sheets
■**Textile:** Moisture control of textile and fiber
■**Printing:** Moisture control of paper after dryer of web offset printing machine
■**Automotives:** Cooling carriages of automobile bodies on the painting lines after oven
■**Food:** Spraying egg yolk, oil, honey, and more

New cleaning method "Fog Cleaning"

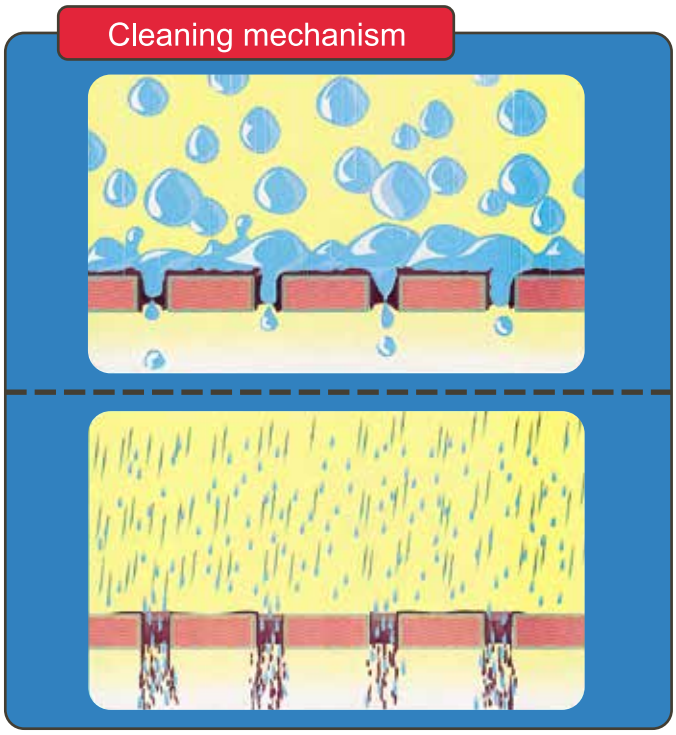

■For precise cleaning in cleaning process of photo-processing products

In conventional cleaning methods, large droplets created by hydraulic nozzles are used and cannot clean within fine interstices.
By using air, pneumatic spray nozzles produce very fine droplets for "fog cleaning".

■Features of Fog Cleaning

①Very fine droplets get into interstices and wash out dirt.
②Velocity of cleaning water has been remarkably improved due to compressed air blow, that contributes to maximizing spray impact.
③Compressed air will blow off puddles on surfaces of objects, stopping chemical reactions, and thus, it will get better cleaning effects.